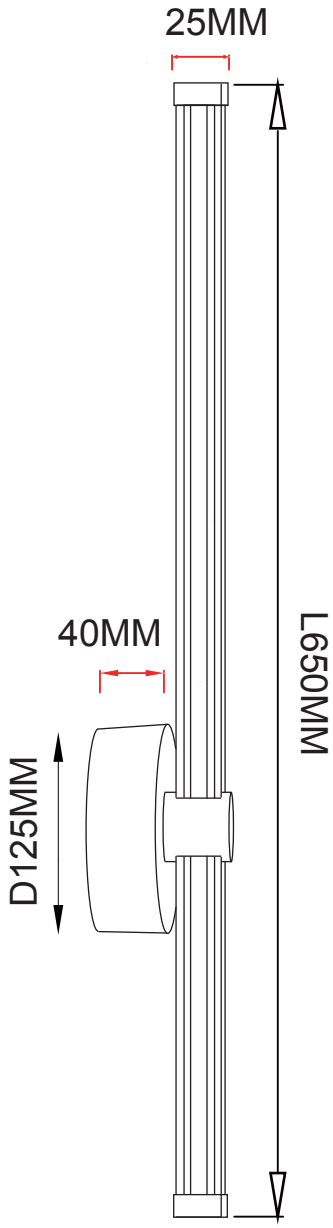
25MM
40MM
L650MM
D125MM

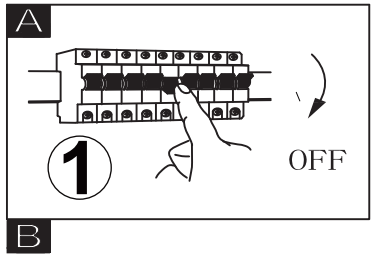
A
1
OFF
B

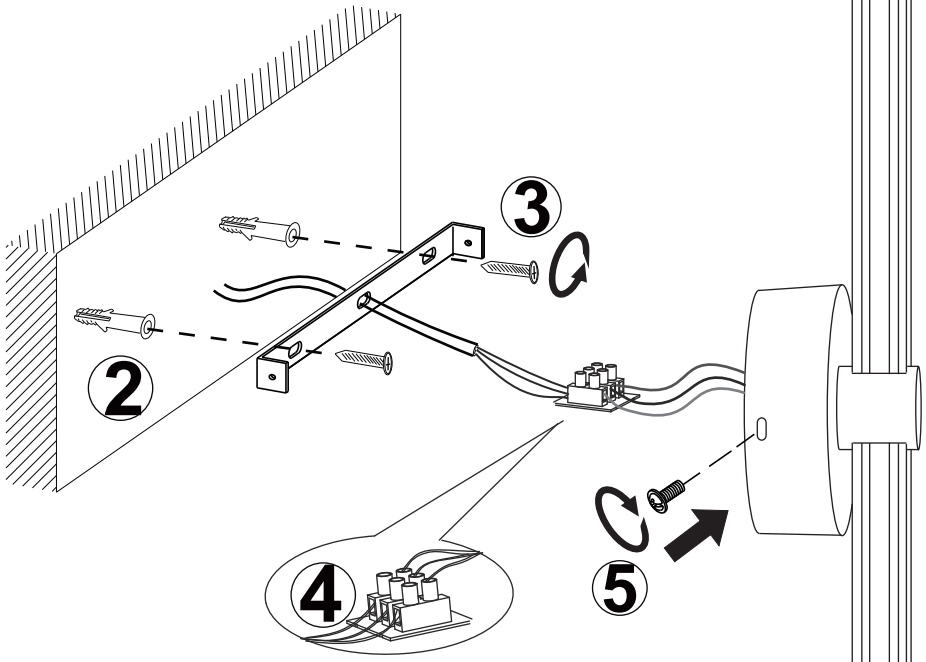
3
2
4
5

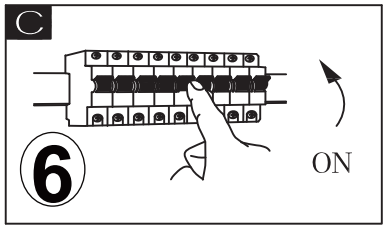
C
6
ON